WARMPOOL

VORTEX BLOWER SERIES

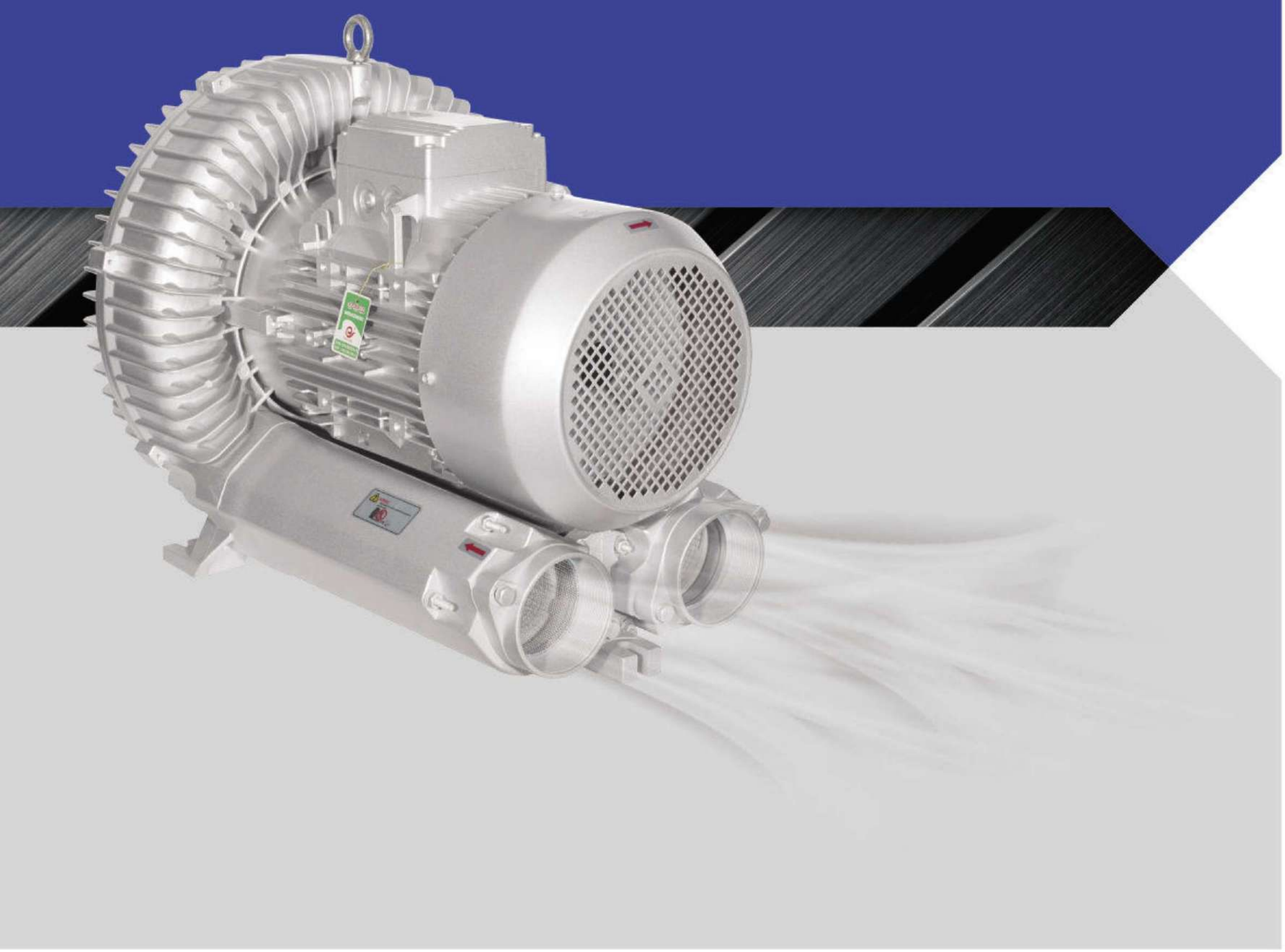

WE ARE DEDICATED TO IMPROVING SUPERIOR QUALITY

BECAUSE OF PROFESSION
WE ARE TRUSTWORTHY

AIR VOLUME BEYOND YOUR IMAGINATION

WS series Vortex Blower

Application Examples

Gas movement lose system

Vacuum lifting and clamping system

Packing Machine

Waste water treatment

Turbocharging of sewage treatment fishing pond

Printer / Copying / machine gas purification

sewing machine

Fishing pond ventilation system

Gas analysis

Swimming pool ventilation

Bagging / Bottling / Filling System

Soil modification

Foam forming system

Letter classification and parcels

Food Processing System

laser printer

Dental vacuum suction machine

Paper handling system

Exploded view

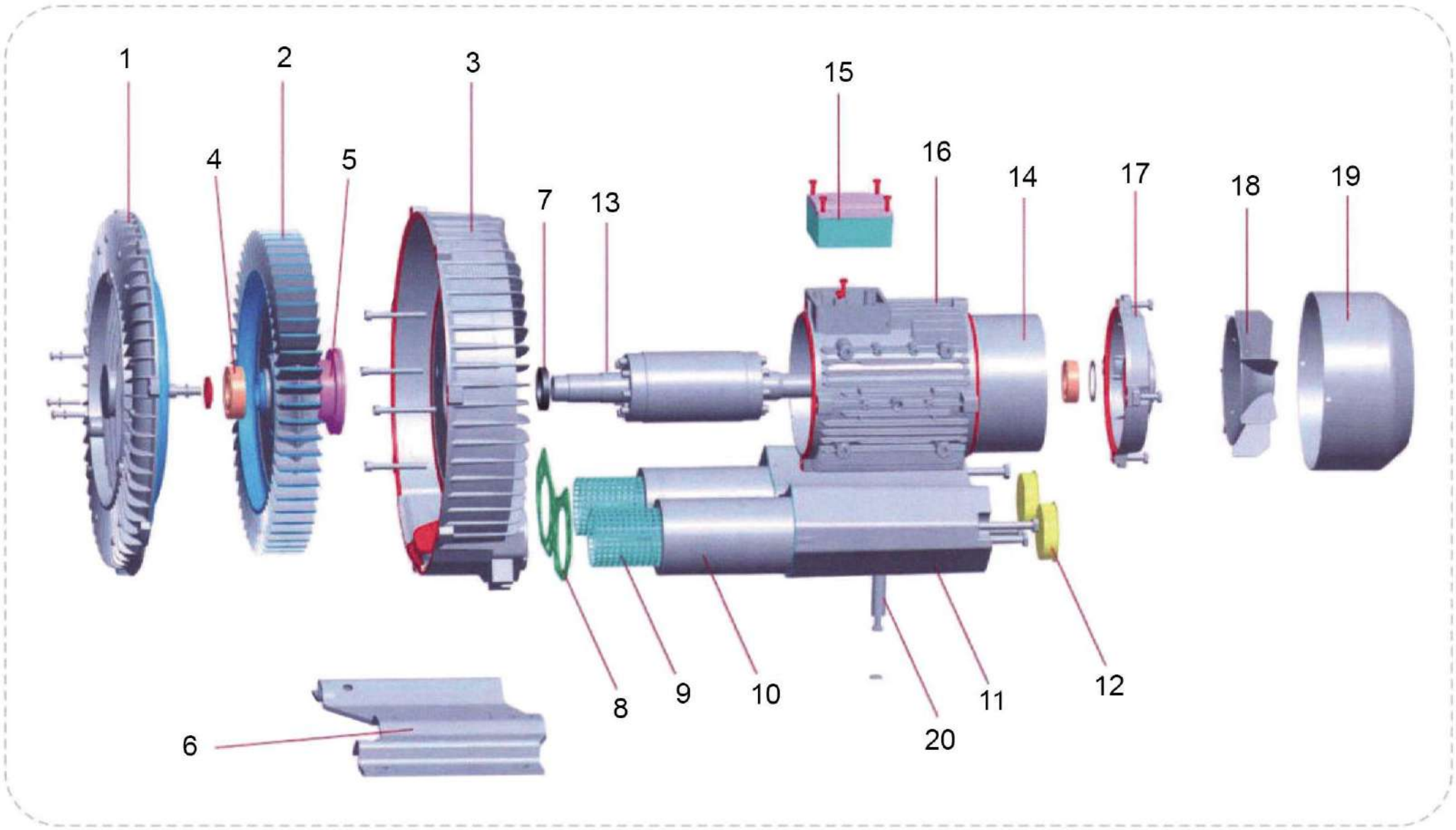

1. Pump cover
2. Impeller
3. Pump body
4. Bearing
5. Bearing base
6. Motor bedplate
7. Oil seal
8. Gasket
9. Silencer net
10. Silencers sponge
11. Silencer tube
12. Joint (flange)
13. The rotor
14. Motor
15. Terminal box
16. The motor sleeve
17. The motor cover
18. Motor fan
19. Motor fan cover
20. Support tube

WARMPOOL VORTEX BLOWER

Quick selection

Model	WPS-0.55
Power(W)	550
Voltage(V)	220
Maximum Wind Pressure(kpa)	14
Maximum Suction Pressure(kpa)	13
Air volume (m^3/h)	110
Noise	63
Duct diameter(mm)	40
Weight(kg)	15.5
Positive hole spacing	205
Side hole distance	85

Model	WPS-0.75
Power(W)	750
Voltage(V)	220
Maximum Wind Pressure(kpa)	21
Maximum Suction Pressure(kpa)	20
Air volume (m^3/h)	150
Noise	63
Duct diameter(mm)	50
Weight(kg)	19
Positive hole spacing	225
Side hole distance	95

Model	WPS-1.10
Power(W)	1100
Voltage(V)	220
Maximum Wind Pressure(kpa)	24
Maximum Suction Pressure(kpa)	22
Air volume (m^3/h)	220
Noise	66
Duct diameter(mm)	60
Weight(kg)	25
Positive hole spacing	270
Side hole distance	140

Model	WPS-1.50
Power(W)	1500
Voltage(V)	220
Maximum Wind Pressure(kpa)	27
Maximum Suction Pressure(kpa)	24
Air volume (m^3/h)	240
Noise	66
Duct diameter(mm)	60
Weight(kg)	26
Positive hole spacing	270
Side hole distance	140

Model	WPS-2.20
Power(W)	2200
Voltage(V)	380
Maximum Wind Pressure(kpa)	36
Maximum Suction Pressure(kpa)	33
Air volume (m^3/h)	290
Noise	70
Duct diameter(mm)	60
Weight(kg)	36
Positive hole spacing	295
Side hole distance	140

Model	WPS-2.20T
Power(W)	2200
Voltage(V)	380
Maximum Wind Pressure(kpa)	36
Maximum Suction Pressure(kpa)	33
Air volume (m^3/h)	290
Noise	70
Duct diameter(mm)	60
Weight(kg)	36
Positive hole spacing	295
Side hole distance	140

Quick selection

Model	WPS-3.00T
Power(W)	3000
Voltage(V)	380
Maximum Wind Pressure(kpa)	38
Maximum Suction Pressure(kpa)	35
Air volume (m^3/h)	350
Noise	70
Duct diameter(mm)	60
Weight(kg)	37
Positive hole spacing	295
Side hole distance	140

Model	WPS-4.00T
Power(W)	4000
Voltage(V)	380
Maximum Wind Pressure(kpa)	45
Maximum Suction Pressure(kpa)	41
Air volume (m^3/h)	480
Noise	72
Duct diameter(mm)	74.5
Weight(kg)	53
Positive hole spacing	304
Side hole distance	195

Model	WPS-5.50T
Power(W)	5500
Voltage(V)	380
Maximum Wind Pressure(kpa)	50
Maximum Suction Pressure(kpa)	48
Air volume (m^3/h)	520
Noise	73
Duct diameter(mm)	74.5
Weight(kg)	66
Positive hole spacing	365
Side hole distance	200

Model	WPS-7.50T
Power(W)	7500
Voltage(V)	380
Maximum Wind Pressure(kpa)	56
Maximum Suction Pressure(kpa)	51
Air volume (m^3/h)	550
Noise	74
Duct diameter(mm)	76
Weight(kg)	69
Positive hole spacing	365
Side hole distance	200

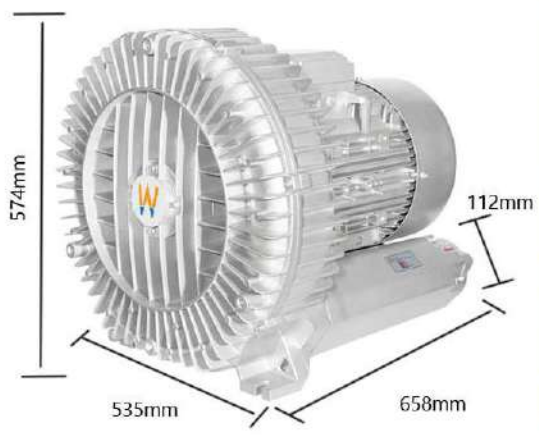

Model	WPS-9.00T
Power(W)	9000
Voltage(V)	380
Maximum Wind Pressure(kpa)	62
Maximum Suction Pressure(kpa)	55
Air volume (m^3/h)	1100
Noise	76
Duct diameter(mm)	112
Weight(kg)	140
Positive hole spacing	360
Side hole distance	570

WARMPOOL VORTEX BLOWER

Single-phase/Three-phase

NO. (S=three)	Power (W)	(V)	Current (A)	Maximum positive pressure (Kpa)	Maximum negative pressure (Kpa)	Air volume (m^3/h)	Noise (dB)	Air duct diameter (mm)	Outine dimension (mm)	Weight (kg)
WPS-0.55	550	220	3.5	17	13	110	63	40	280*260*270	15.5
WPS-0.55T	550	380	1.2	17	13	110	63	40	280*260*270	15.5
WPS-0.75	750	220	6.5	21	20	150	63	50	300*290*300	19
WPS-0.75T	750	380	2	21	20	150	63	50	300*290*300	19
WPS-1.10	1100	220	7.2	24	22	220	66	60	330*330*340	25
WPS-1.10T	1100	380	3.1	24	22	220	66	60	330*330*340	25
WPS-1.50	1500	220	9	27	24	240	66	60	360*330*340	26
WPS-1.50T	1500	380	3.4	27	25	240	66	60	360*330*340	27
WPS-2.20	2200	220	10	36	33	390	70	60	400*380*390	36
WPS-2.20T	2200	380	5.5	36	33	390	70	60	400*380*390	36
WPS-3.00T	3000	380	7	38	35	350	70	60	400*380*400	37
WPS-4.00T	4000	380	8.2	45	41	480	72	74.5	430*420*460	53
WPS-5.50T	5500	380	12	50	48	520	73	74.5	480*450*460	66
WPS-7.50T	7500	380	15.5	56	51	550	74	74.5	490*470*470	69
WPS-9.00T	9000	380	19.5	58	53	920	75	112	650*550*570	132

Double-stage

2 NO. (Double centrifuge blade)	Power (W)	Voltage (V)	Maximum positive pressure (Kpa)	Maximum negative pressure (vaccum) (Kpa)	Air volume (dB)	Noise (dB)	Air duct diameter (mm)	Outine dimension (mm)	Weight (kg)
2HG220-A21-700	2HG220-700W/220V	220	24	21	88	55	40	320*290*270	20
2HG420-A31-1500	2HG420-1.5KW/220V	220	26	26	150	66	50	400*350*320	32
2HG420-A41-2200	2HG420-2.2KW/220V	220	26.5	26.5	150	66	50	400*350*320	35
2HG520-A41-2200	2HG520-2.2KW/220V	220	36	29	230	72	60	430*420*365	41
2HG220-H26-700	2HG220-700W/380V	380	24	21	88	55	40	320*290*270	19
2HG320-H26-850	2HG320-850W/380V	380	23	20	110	58	40	320*300*270	21
2HG320-H36-1300	2HG320-1.3KW/380V	380	29	28	110	58	40	345*300*295	24
2HG420-H36-1600	2HG420-1.6KW/380V	380	28	28	150	66	50	400*322*320	29
2HG420-H46-2200	2HG420-2.2KW/380V	380	42	33	150	66	50	400*322*320	31
2HG520-H36-2200	2HG520-2.2KW/380V	380	36	29	230	72	60	430*380*395	39
2HG520-H46-3000	2HG520-3KW/380V	380	41	34	230	72	60	475*380*365	43
2HG520-H57-4000	2HG520-4KW/380V	380	49	39	230	72	60	500*450*425	49
2HG720-H37-4300	2HG720-4.3KW/380V	380	38	36	320	73	60	515*430*420	63
2HG720-H47-5500	2HG720-5.5KW/380V	380	50	44	320	73	60	607*430*435	76
2HG720-H57-7500	2HG720-7.5KW/380V	380	57	54	320	73	60	607*430*435	80
2HG820-H17-5500	2HG820-5.5KW/380V	380	24	24	520	74	75	510*545*415	93
2HG820-H27-7500	2HG820-7.5KW/380V	380	40	40	540	74	75	550*480*435	96
2HG820-H37-11000	2HG820-11KW/380V	380	66	43	560	75	75	589*500*550	135
2HG820-H37-15000	2HG820-15KW/380V	380	69	48	590	75	75	611*550*569	140
2HG820-H37-18500	2HG820-18.5KW/380V	380	72	50	620	75	75	611*550*569	145

WARMPOOL VORTEX BLOWER

Model		Frequency (Hz)	Power (kw)	Voltage (V)	Current (A)	Noise Db(A)	Max. Flow (m^3/h)	Max. Pressure (mbar)	Max. Vacuum (mbar)	Ctn size (mm)	Weight (kgs)
Series number	Conventional model										
WS010	WPS-120	50	*0.12	220	0.60	45	40	55	50	300*260*280	7
	- -	50	0.16	220	0.75	45	40	55	50	300*260*280	7
WS110	WPS-180	50	*0.18	220	0.85	48	56	70	60	300*260*280	8
	- -	50	0.22	220	1.00	48	56	70	60	300*260*280	8

The performance curves are valid for pumping air at 15ºC at the inlet flanges with an air pressure of 1013 mbar and a tolerance of ±10%. The total pressure differences are valid up to an intake and ambient temperature of 25ºC.

▶ Vacuum selection chart 50Hz

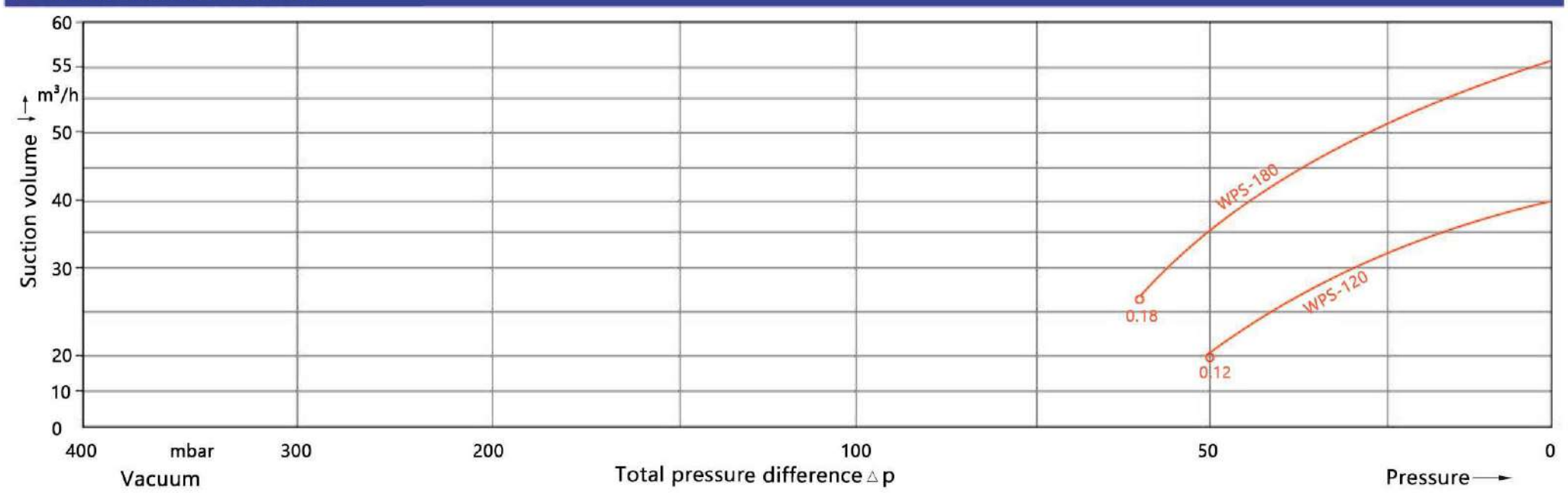

▶ Compression selection chart 50Hz

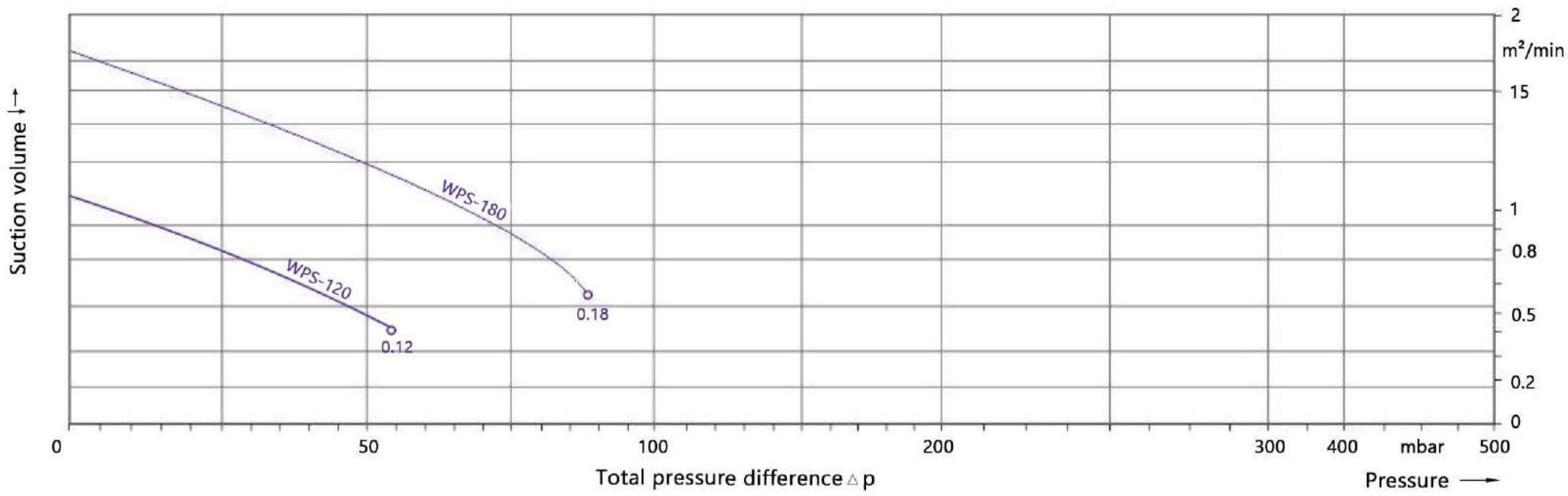

WARMPOOL VORTEX BLOWER

Model		Frequency (Hz)	Power (kw)	Voltage (V)	Current (A)	Noise Db(A)	Max. Flow (m^3/h)	Max. Pressure (mbar)	Max. Vacuum (mbar)	Ctn size (mm)	Weight (kgs)
Series number	Conventional model										
WS210	WPS-300(L)	50	*0.3	220	2.10	53	60	120	110	370*330*350	14
	- -	60	0.35	220	2.70	56	72	140	130	370*330*350	14
	WPS-300(L)	50	*0.3	220	2.10	53	60	120	110	370*330*350	14
	- -	60	0.35	220	2.10	56	72	140	130	370*330*350	14
	- -	50	0.32	220	2.70	53	80	120	110	370*330*350	14
	- -	60	0.37	220	3.00	56	96	140	130	370*330*350	14
	WPS-370(L)	50	*0.37	220	3.20	53	80	140	130	370*330*350	15
	- -	60	0.45	220	4.00	56	96	160	150	370*330*350	15
	WPS-300(L)S	50	*0.3	200-240△/345-415Y	2.1△/1.2Y	53	60	120	110	370*330*350	14
	- -	60	0.35	200-240△/345-415Y	2.0△/1.15Y	56	72	140	130	370*330*350	14
	WPS-300(L)S	50	*0.3	200-240△/345-415Y	2.1△/1.2Y	53	60	120	110	370*330*350	14
	- -	60	0.35	200-240△/345-415Y	2.0△/1.15Y	56	96	140	130	370*330*350	14
	- -	50	0.32	200-240△/345-415Y	2.4△/1.35Y	53	80	120	110	370*330*350	14
	- -	60	0.37	200-240△/345-415Y	2.4△/1.35Y	56	96	140	130	370*330*350	14
	WPS-370(L)S	50	*0.37	200-240△/345-415Y	2.6△/1.5Y	53	80	140	130	370*330*350	15
	- -	60	0.45	200-275△/380-480Y	2.6△/1.5Y	56	96	160	150	370*330*350	15
WS222	WPS-700S2	50	*0.70	200-240△/345-415Y	3.8△/2.2Y	63	150	250	210	470*330*350	20
	- -	60	0.83	220-275△/380-480Y	3.75△/2.15Y	64	165	280	250	470*330*350	20

The performance curves are valid for pumping air at 15°C at the inlet flanges with an air pressure of 1013 mbar and a tolerance of ±10%. The total pressure differences are valid up to an intake and ambient temperature of 25°C.

▶ Vacuum selection chart 50Hz

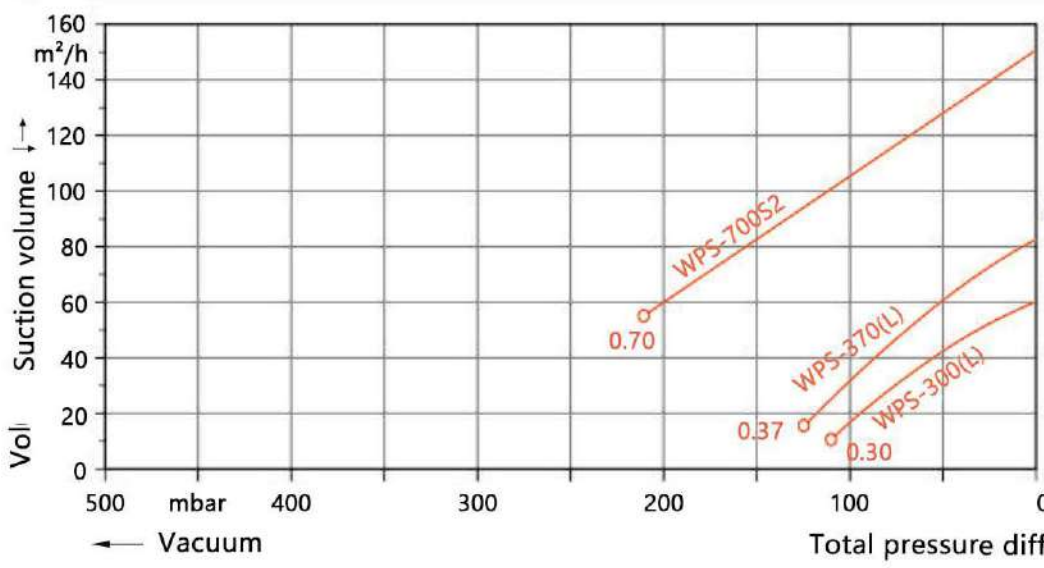

▶ Compression selection chart 50Hz

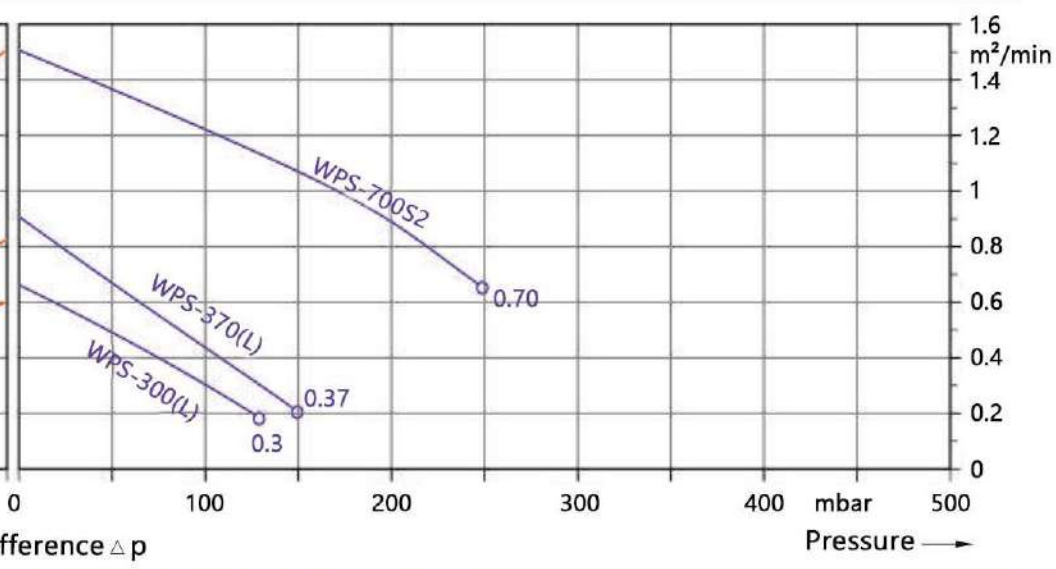

▶ Vacuum selection chart 50Hz

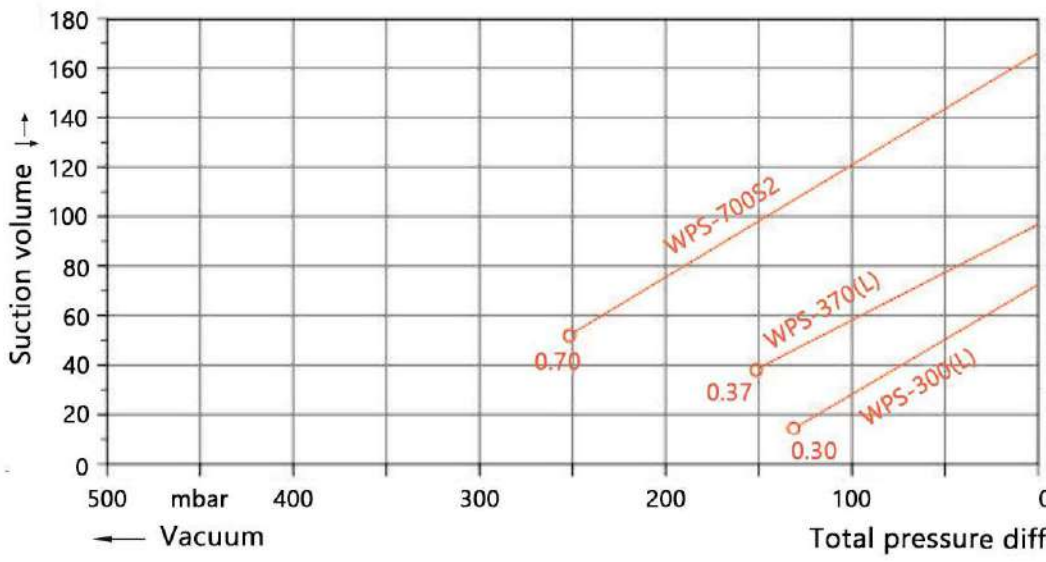

▶ Compression selection chart 50Hz

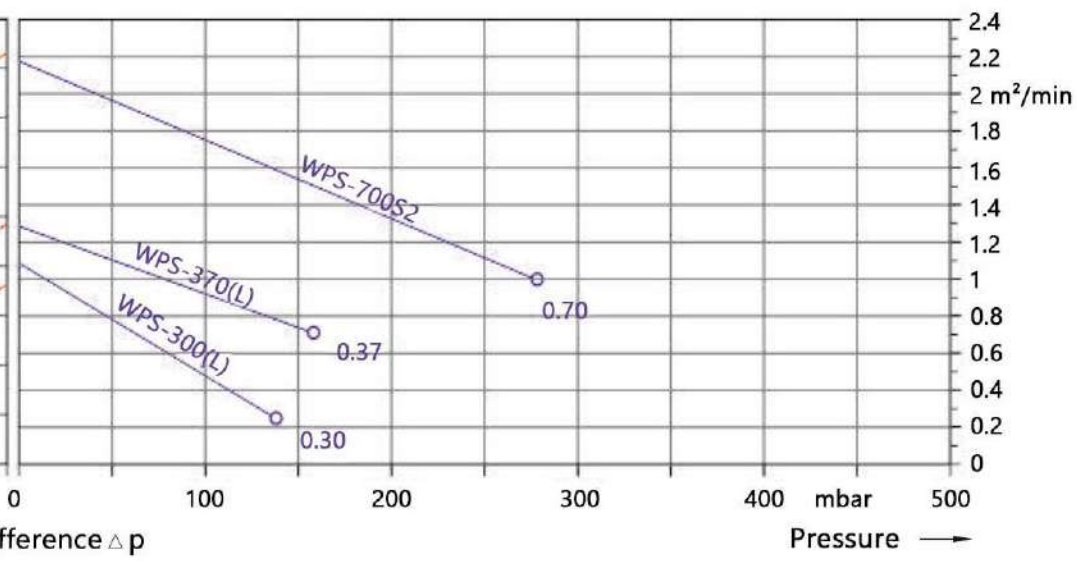

GS CE CCC ISO9001 RoHS

Warmpool S.L.

Addres: Calle Monte, 2, 03186 Torrevieja,
Alicante, España

Phone: +34 644 19 91 15
+34 629 82 66 48
+34 865 75 49 06

E-mail: info@warmpool.eu

Web: www.warmpool.eu