DC inverter swimming pool heat pump

SILENP

Instruction manual

Model: SP07 - SILENP

SP09 - SILENP

SP013 - SILENP

SP016 - SILENP

- The instructions in this manual are for the use of qualified individuals specially trained and experienced in the installation and maintenance of this type of equipment.
- Persons not qualified shall not attempt to install, service, or maintain this equipment.
- Please read the manual carefully before installation.
- Please keep this manual well for future reference.

CONTENTS

SILENT& EFFICIENT

ENVIRONMENT FRIENDLY

DURABLE MATERIAL

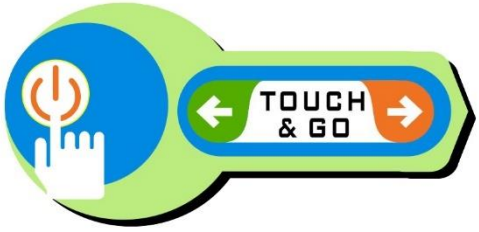

EASY CONTROL

Part I: Important safety instruction

1.1 Important safety instruction

To reduce risk of injury, do not permit children to use or climb on the heat pump, pumps or filters. Closely supervise children at all times. Components such as the filtration system, pumps and heaters must be positioned to prevent children from using them as a means of access to the pool.

This heat pump is intended for use on swimming pools and may also be sued with spas.

All electrical wiring must be in conformance with all applicable local codes, regulations and the National Electric Code. Hazardous voltage can shock, burn, cause death or serious property damage. Provide a properly located outlet. All electrical wiring must be in conformance with applicable local and national codes and regulations. Before working on this unit, turn off power supply to the heat pump.

To reduce the risk of electric shock replace damaged wiring immediately.

Pool and spa water circulation systems operate under hazardous pressure during start up, normal operation, and after pump shut off. Stand clear of circulation system equipment during start up. Before servicing pool and spa water circulation system, all system and pump controls must be in off position and filter manual air relief valve must be in open position. Do not change filter control valve position while system pump is running. Before starting system pump, fully open filter manual air relief valve. Do not closed filter manual air relief valve until a steady stream of water is discharged.

The unit must be installed and repaired by qualified technician, not consumer himself.

Make sure a leakage protection switch must be installed near the heat pump in an accessible place.

Do not open the electrical box without shutting off all power supply to the heat pump.

When transporting the heat pump unit, make sure that it is not upside down and not tilted more than 45°in any direction.

This unit is designed for outdoor installation, do not install it in a closed area。

Do not install the unit in places where there are any inflammable or explosive materials.

Do not restrict or block the air intake or outlet.

When turn off the unit more than 24 hours and the ambient temperature lower than 0℃, please drain the water inside unit to prevent the damage to the unit of ice.

Respect safety distance between the unit and other equipment or structures. Guarantee adequate space for access to the unit for maintenance and/or service operations.

Power supply: the cross section of the electrical cables must be adequate for the power of the unit and the power supply voltage must correspond with the value indicated on the respective units. All units must be earthed in conformity with legislation in force in the country concerned.

Part II: specification

1. Diameter

MODEL: SILEN07-SKR015Y-DCP-H32, SILEN09-SKR020Y-DCP-H32

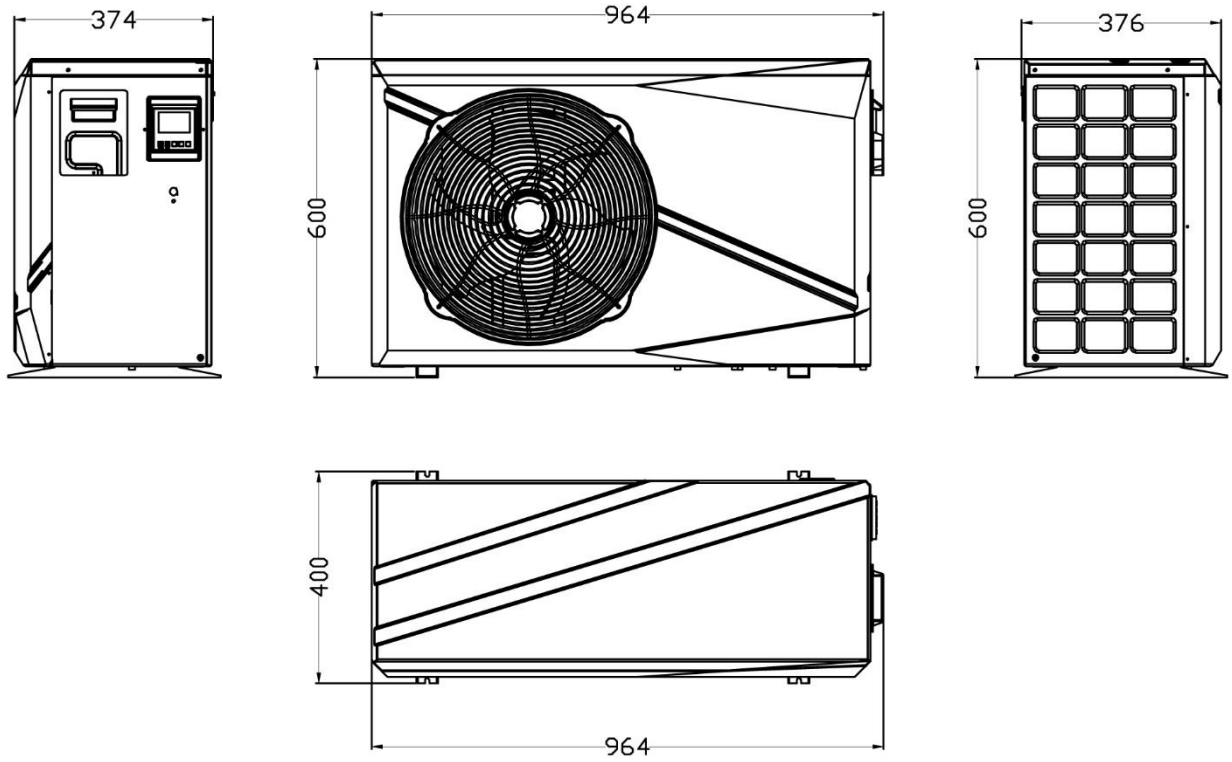

MODEL: SILEN13-SKR030Y-DCP-H32, SILEN16-SKR040Y-DCP-H32

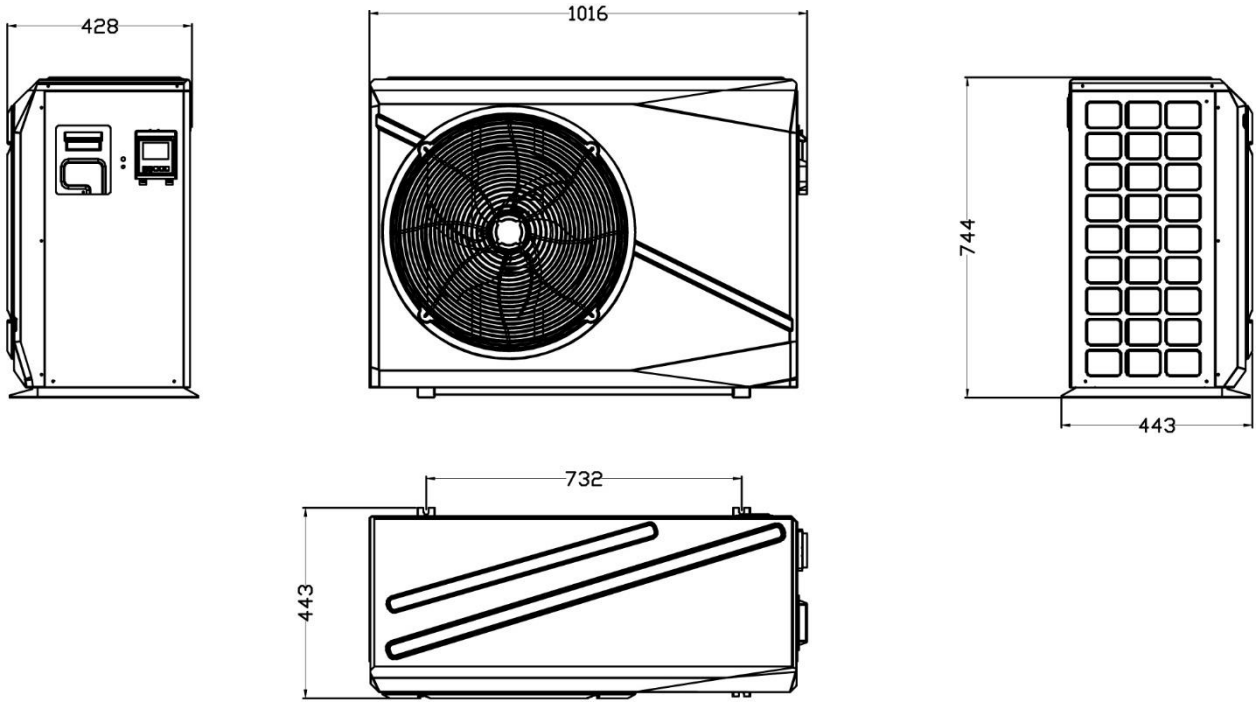

2. Exploded drawing

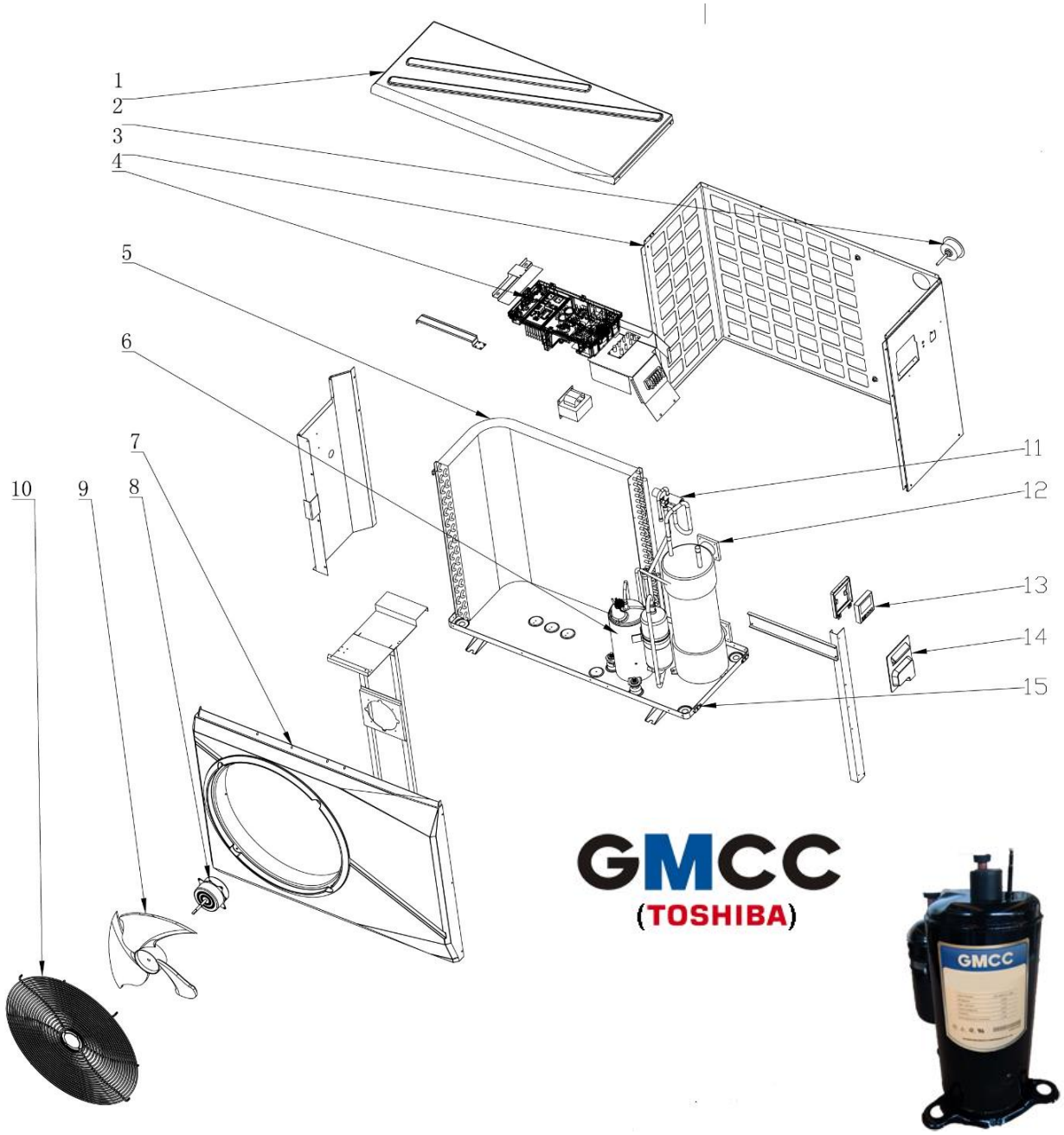

1	Cover sheet	9	Fan blade
2	Pressure gauge	10	Fan grid
3	Back sheet (grid)	11	Four way valve
4	Electrical box (PCB and Inverter)	12	Titanium heat exchanger
5	Evaporator	13	Controller
6	Compressor	14	Handle and power cable inlet
7	Front cover	15	Bottom sheet
8	Fan motor	16	-

Part III Installation guide

4.1 Transportation

When transporting the heat pump, ensure that it is not upside down and it is not tilted more than 45°in any direction. The unit in its case can be transported with a lift truck or hand truck.

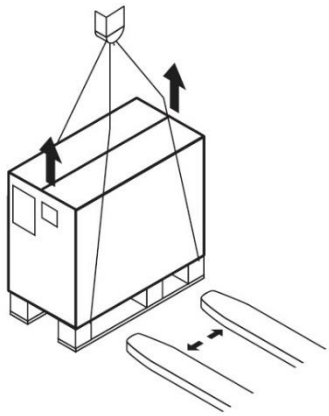

4.2 Installation location requirement

The location of the heat pump is very important for efficient operation. And failure to following instruction may result in poor performance, property damage and voided warranty. In order of importance, the installer must consider the following conditions.

- The heat pump will perform more efficiently when placed in direct sunlight.
- Ample air intake with avoidance of air re-circulation.
- Accessibility of service panels.
- This unit is designed for outdoor installation; do not install it in a full closed space.
- Choose a horizontal position where it can stand the weight of the unit, and it won't increase noise and vibration as well, preferably on a concrete slab. And base must be high enough to avoid the unit dipping in the water in rainy days.
- Do not install the unit within 1m of fossil fuel burning heaters. Air intakes along the sides of the heat pump unit could disturb the combustion process of the unit and cause damage or personal injury.
- Do not install the unit in place where there is pollution, corrosive gas, or accumulation of dirt or fallen leaves.
- There should not be inflammable or explosive materials close to the unit.

- To minimize water piping, please locate the unit as close as possible to the existing pool water pump and filter.
- The unit will bring condensate, please install a drainpipe to facilitate water discharge.
- The minimum distance for all side as following

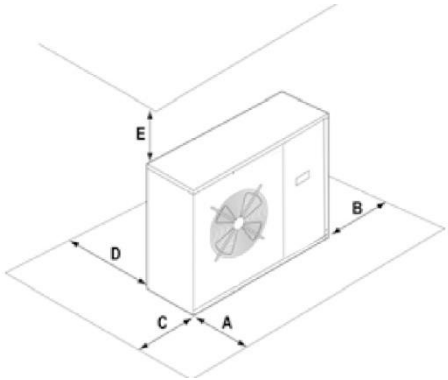

A	B	C	D	E
1500	500	400	400	500
1500	500	400	400	500
1500	500	400	400	500

4.3 Installation

4.3.1 Remove package

Remove the package, be careful not to damage any components.

4.3.2 Installation the unit

- Mount the unit on the selected base and install the 4 shockproof rubber pads under the 4 feet of the unit to reduce vibration and sound transmission to the base.
- Condensation will be produced by the evaporator coil when the unit is running, connect the drain connector at the bottom of the unit, keep the drain hole, located at the rear of the bottom pan of the base of the unit, clear of debris.
- The horizontal distance between the heat pump and the pool should not be more than 20m.
- After finishing connection, discharge the air in the suction pipe of the water pump.
- Connect the drain connector at the bottom of the unit.
- Wire the power of the heat pump unit and insulate water pipes.

4.4 Hydraulic connections

4.4.1 Single unit operation

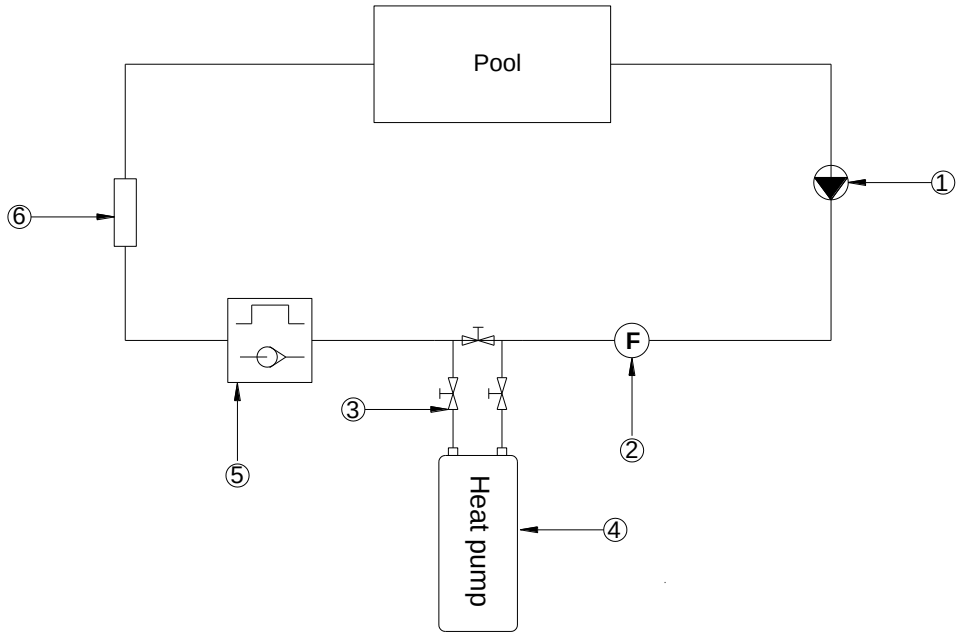

4.4.2 Multi unit operation

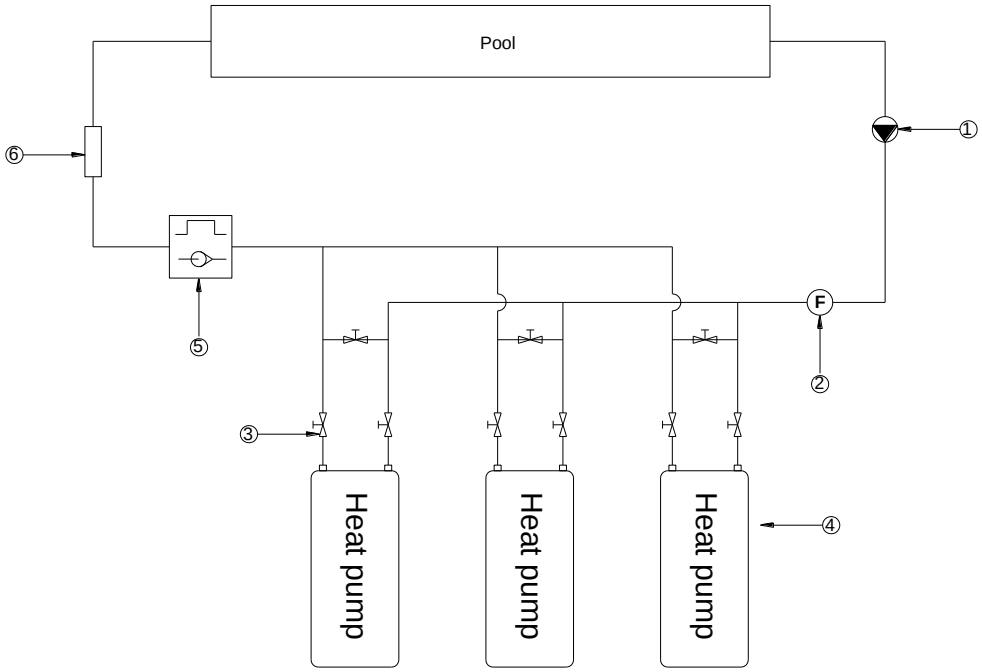

1	Circulation water pump	4	Heat pump
2	Filter	5	Check valve
3	Gate valve	6	Chlorinator

-We recommend to install a set of valves allowing to isolate the pool heater from the filtration system when necessary. Moreover, you have to make sure that your pool heat pump may be disconnected from

the pool pipes without having to stop the water pump or without losing great quantities of water.

-A by-pass must be installed to make it easier to work on the appliance.

-Respect the direction of hydraulic connection.

-When hydraulic installations are finished, operate the pool filter pump with heat pump off. Check the piping system for leaks. Observe the filter water pressure gauge for abnormalities or obstructions in the filtering system.

Condensate drainage:

The units have been designed to use their own base as a drain pan; a plastic pipe fitting is standard provided to be installed onto the lower part of the units in the special housing enabling the connection of a drainage pipe.

Drainage pipe fitting

Drainage pipe fitting housing

Each unit also provided, on the basement, with a hole that can allow to drain any condensation that may escape from plumbing pipes.

4.5 Power connection

All electrical wiring must be in conformance with all applicable local codes, regulations and the National Electrical Code. Ground and bond the heat pump before connecting to electrical power supply. Failure to bond the heat pump can cause serious or fatal electrical shock hazard. Do not ground to a gas supply line. To void dangerous or fatal electrical shock, turn off power the heat pump before working on electrical connections.

For your own security, and to ensure proper operation of the unit, this heat pump unit must be installed and repaired by qualified technician, not consumer himself.

An outdoor waterproof disconnect should be mounted adjacent to the heat pump for safety.

Do not use any damaged wires and switches.

Never open the electrical box without shutting off all power sources to the heat pump.

All the wiring must meet the electrical safety requirement and conducted by qualified electricians.

Do not disconnect the earth connection of the power in any condition.

The appliance must be connected to earth socket.

The heat pump's electrical supply must be provided through a protection and circuit breaking device (not supplied), complying with the standards and regulations in force in the country where it is installed.

When the water heater connects to the electricity network, there must be a short-circuit protection.

Do not use the main power switch to control the start/stop of the unit.

The power supply must correspond to the voltage indicated on the appliances information plate.

Connection terminal board

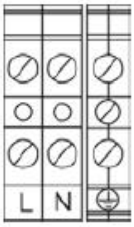	L : live N : neutral ⏚ : earth

4.5.1 Wiring diagram

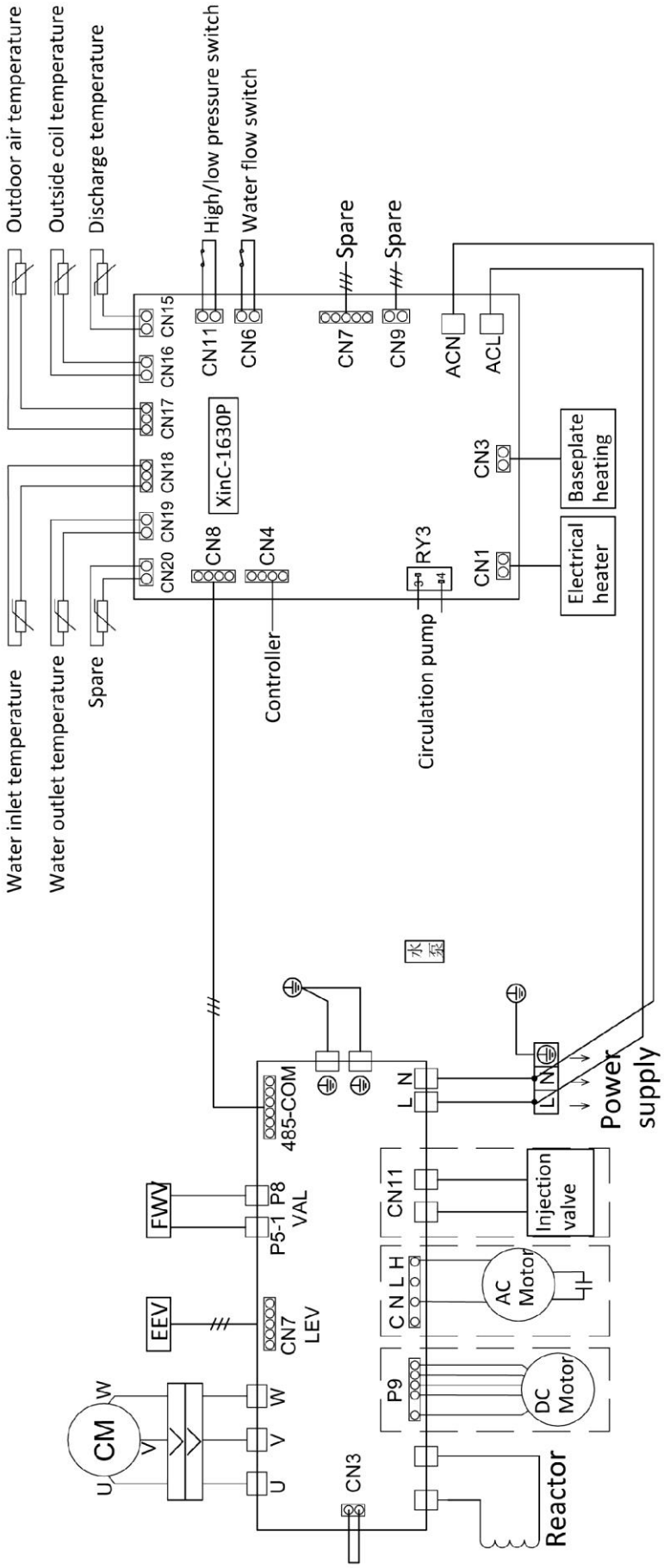

- Choose the suitable size of cables

  The data of following table is just for reference, please subject to local norm.

Model	SP07 - SILENP	SP09 - SILENP	SP013 - SILENP	SP016 - SILENP
Power supply	230V~, 50Hz	230V~, 50Hz	230V~, 50Hz	230V~, 50Hz
Circuit Breaker (A)	25/20	25/20	30/25	30/25
Power wiring (mm^2)	3x2.5	3x2.5	3x2.5	3x2.5
Ground wiring (mm^2)	2.5	2.5	2.5	2.5

- Electrical terminal board inlet/outlet

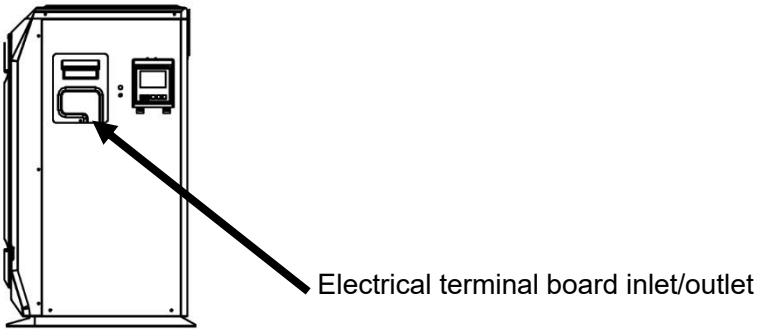

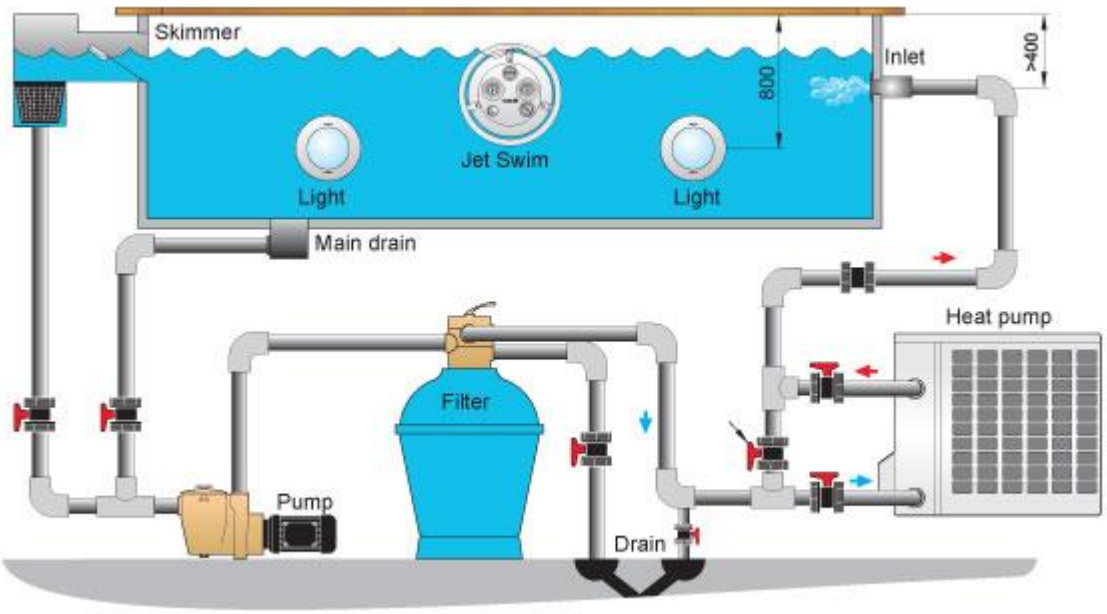

4.6 Trial operation

Trial operation should be operated by qualified technician.

4.6.1Preparation

The following items should to be checked before startup

a). The power system of the unit must be connected completely and correctly.

b). All valves that could impair water flow must be opened.

c).The air intake and air outlet must be cleared.

d).The ventilator must turn to the direction indicated by the arrow.

e).Do not insert your hands or any objects into the fan for it is dangerous, the fan runs in a high speed, it will cause any hurt.

f).Set proper running parameters.

g).Ensure there is drainage channel for condensate.

h). Check whether there is any air bulb inside the water circulation pump and pipe, discharge it if there is.

i). When stops the unit when it is operating, if restart the unit, there is three minutes for protection.

j). Keep the children away from the unit.

4.6.2 Trial running

- Turn on the unit and then observe whether it works normally.

4.7 Caution

If anything happen as follows, please stop the unit immediately and cut the power off, don't repair it by yourselves, please contact with our authorized agent or maintenance personnel, without professional technology, it may cause fire and you may get hurt.

1. Fuse blown or protection activated frequently
2. The wire and switches are heated abnormally
3. Abnormal sounds come out from the unit.
4. Abnormal smell comes out of the unit.
5. Leakage of electricity

Part IV Control System

5.1 Installation position of controller

The controller was installed on the right side of the machine with a waterproof box before factory. The controller can be kept in the original installation position and allowed to move to indoors.

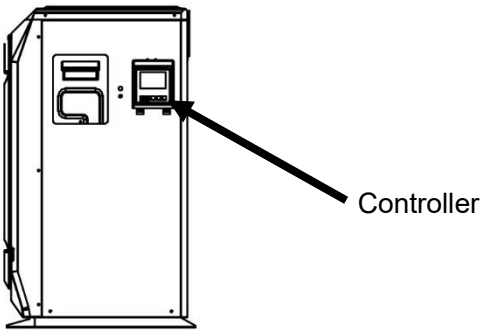

5.2 Full screen

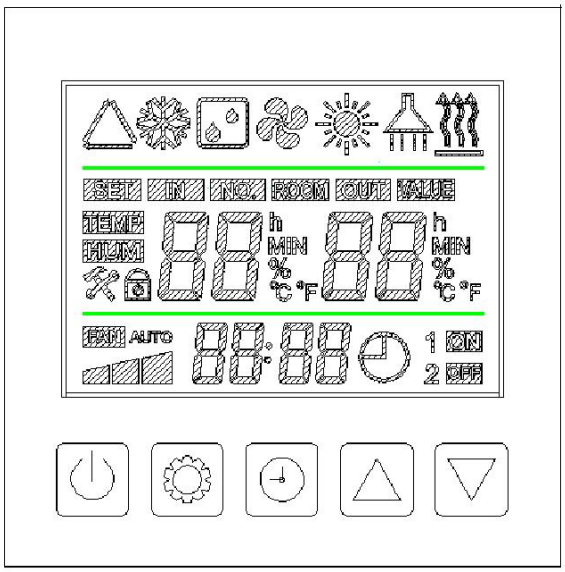

5.3 Operation instructions

A. Lock/Unlock the buttons

1. Lock buttons: the buttons will be locked automatically if no operation for 60 seconds,

2. Unlock buttons: In lock status, press  for 5 seconds to unlock the buttons.

B. On/Off the unit

1. Connect the power supply to the unit, press  to turn on the unit.

2. When the unit is on, press turn off the unit.

C. Select the working mode

When the unit is on, press to select working mode: heating mode, auto mode

In heating mode, shows on the screen.

In auto mode, shows on the screen.

D. Set water temperature

When the unit is on, press or to set pool water temperature, the setting will be saved automatically when there is no operation on it for 3 seconds.

E. Set the clock

1. Under ON or OFF status, extended press for 5 seconds to enter clock setting status.
2. Press , hour section flash, press or to set the hour;
3. Then press , minute section flash, press or to set the minute;
4. Press to finish setting, or without operation for 30 seconds, the setting will be saved and exit to main menu.

F. Set or Cancel the timer

1. In main menu, press to enter ON TIMER setting of timer 1.
2. Press , hour section flash, press or to set the hour of ON TIMER of timer 1;
3. Then press , minute section flash, press or to set the minute of ON TIMER of timer 1;
4. After ON TIMER setting, press to enter OFF timer setting of timer 1.
5. Press , hour section flash, press or to set the hour of OFF TIMER of timer 1;

6. Then press , minute section flash, press or to set the minute of OFF TIMER of timer 1;

7. After OFF TIMER setting, press save current setting of ON/OFF TIMER of timer 1, and enter timer 2 setting. Setting same as timer 1.

8. Press to finish setting, or without operation for 30 seconds, the setting will be saved and exit to main menu.

G. Check operation parameters

Extended press for 3 seconds, enter the menu to check parameter, press or to check.

Parameter Table

No.	Parameters
T1	Discharge temperature
T2	suction temperature
T3	Water inlet temperature
T4	Water outlet temperature
T5	Outdoor coil temperature
T6	Outdoor temperature
T7	Spare
T8	Spare
T9	Spare
T10	Spare
T11	Spare
Ft	Propose frequency
Fr	Actual frequency
1F	Opening of main electronic expansion valve
2F	Opening of injection electronic expansion valve
od	Operation mode of outdoor unit
Pr	Fan motors operation speed of outdoor unit
dF	Defrosting status
0IL	Oil return status
r1	Spare
r2	Electrical heater of bottom sheet

r3	Spare
STF	On/off of four way valve
HF	Spare
PF	Spare
PTF	Spare
Pu	Water pump on/off
AH	High speed on/off of AC fan motors
Ad	Middle speed on/off of AC fan motors
Al	Low speed on/off of AC fan motors
dcU	Voltage of DC busbar
dcC	Current of inverter compressor
AcU	Input voltage
AcC	Input current
HE1	Fail record
HE2	Fail record
HE3	Fail record
HE4	Fail record
Pr	Protocol version
Sr	Software version

H. Set parameters

Extended press  for 3 seconds, enter the menu to check parameter, press  or  to check.

No.	Parameter name	Adjustable Range	Default
L0	Water temperature setting in heating mode	20℃～60℃	26℃
L1	Water difference of start heating	2℃～18℃	2℃
L2	Water difference of stop heating	2℃～18℃	5℃
L3	Water temperature setting in cooling mode	2℃～30℃	12℃
L4	Water difference of start cooling	2℃～18℃	2℃
L5	Water difference of stop cooling	2℃～18℃	2℃
L6	Water temperature of auto-temperature mode	8℃～60℃	26℃

L7	Working mode of water circulation pump	0:heat pump stop, water pump continue operate 1:heat pump stop, water pump stop after 60 seconds, operate 5 minutes in (L8) minutes	0
L8	Heat pump stop, operate 5 minutes in(L8) minutes	3～180 minutes	30

I. Error code

Error code	Description	Remark
E01	Discharge temperature failure	
E05	Coil temperature failure	
E09	Suction temperature failure	
E17	Return water temperature failure	
E18	Water outlet temperature failure	
E21	communication failure with indoor unit	
E22	environment temperature failure	
E25	water flow failure	
E27	PCB and inverter communication failure of outdoor unit	
E28	EEPROM EEPROM error of outdoor unit	
E29	EEPROM EEPROM error of drive PCB	
P02	High/low pressure protection	
P11	overheat protection of high discharge temperature	
P15	over temperature protection of water inlet and outlet difference	
P16	overcool protection	
P17	Antifreeze protection when standby	
P18	Overheat protection of electrical heater	
P19	Current protection of compressor	
P24	fan protection and failure	
P25	low environment temperature protection	
P26	overheat protection of water outlet temperature	
P27	overheat protection of coil temperature of outdoor unit	
r02	drive failure of compressor	
r05	overheat protection of IPM moduel	
r06	overcurrent protection	
r10	Overvoltage protection of DC voltage	
r11	Undervoltage protection of DC voltage	
r12	Overvoltage protection of AC voltage	
r24	Abnormal power supply of outdoor unit	

J. Wifi control

Scan the QR code to install the APP, after installing the APP, the software  will displace on you mobile phone.

1. Software registration

   Please complete registration step by step if new user.

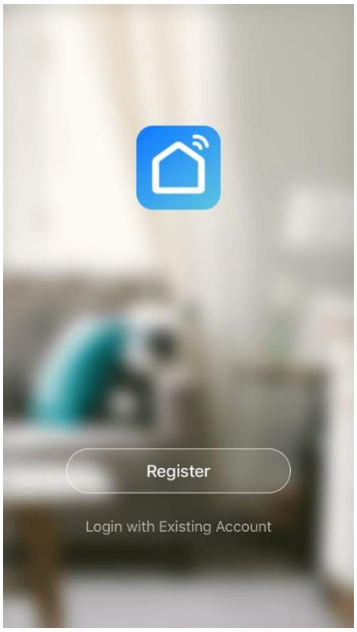

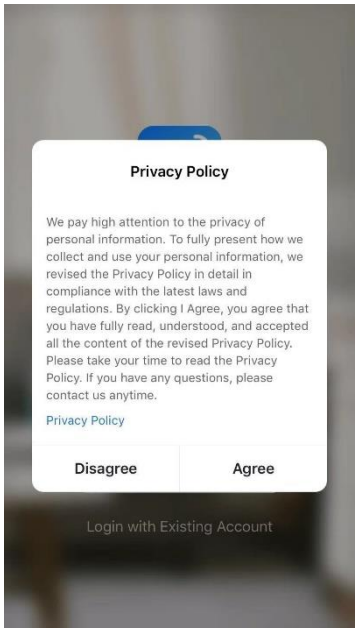

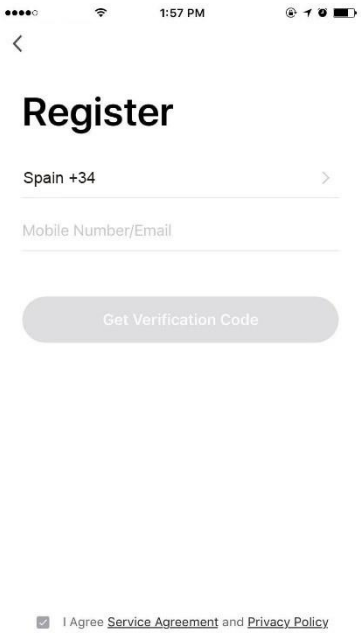

After registration is complete, please log in to the software by user name and password you have set, the heat pump and mobile phone should be connected to WIFI.

Extended press  and  for 3 seconds,  flash on the screen, press ADD DEVICE on the APP on your mobile phone, choose SMAL HOME APPLIANCES on the menu, choose HEATER on the list.

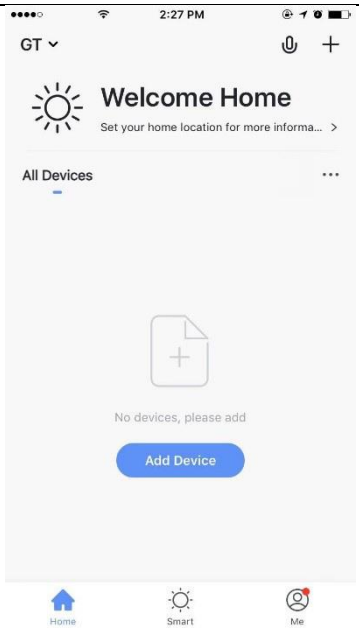

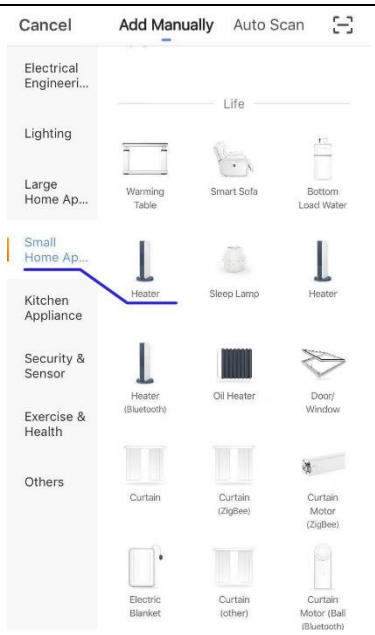

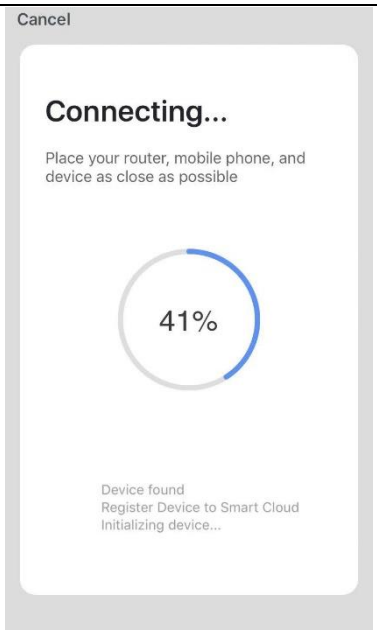

After connecting to the heat pump by AAP, the unit can be turned on/off by APP, can be set water temperature by APP, can be choose operation mode by APP, can set timer by APP.

Part V Maintenance

Before any maintenance on the heat pump system you must turn the unit off and shut off the power to the unit first.

The regular maintenance to the heat pump system can keep the unit in optimum performance. Below are some tips for maintenance.

1. Turn the power off.
2. Do not use petrol, naphtha, dissolvent and any other chemicals on the unit, otherwise, it may damage the surface. Outside of heat pump components can be wiped with a damp cloth and domestic cleaner.
3. Avoid leaning or putting objects on the unit.
4. Keep the unit dry, and drafty round the unit. Clean the heat exchanger regularly (usually once per 1～2 months) to keep a good heat exchange efficiency.
5. If do not use the unit for a long time, the water inside the unit and pipe should be drained, turn the power off and cover the unit with protective cover. Check roundly before you start the unit again.
6. Change the installation site
   If want to change the installation site, please contact with the dealer or the local Customer Service for help.

7. Winterizing: If you close the swimming pool during the winter season, it is essential to drain the water inside unit and pipe in order to prevent generating ice in the condenser and piping systems.

- Stop the unit
- Shut off the breaker.
- Drain the water.
- Cover the heat pump unit with a waterproof cover if leave the unit outdoor during winter

Disposal

Do not dispose this product as unsorted municipal waste. Collection of such waste separately for special treatment is necessary.

Do not dispose of electrical appliances as unsorted municipal waste, use separate collection facilities.

Contact your local government for information regarding the collection systems available. If electrical appliances are disposed of in landfills or dumps, hazardous substances can leak into the groundwater and get into the food chain, damaging you health and well-being.

All data in this manual are subject to change without prior notification.